CONFIDENTIAL

Room Air Conditioner
SVC MANUAL(Exploded View)

MODEL : S3-Q18KL2FN.ALWGIDA
US-Q19SWZE.ANLG

CAUTION

Before Servicing the unit, read the safety precautions in General SVC manual.
Only for authorized service personnel.

Copyright © 2024 LG Electronics Inc. All rights reserved. Only training and service purposes.

1. Specification

Buyer Model	Set (Indoor / Outdoor)		Unit	US-Q19SWZE.ANLG		
Factory Model				S3-Q18KL2FN.ALWGIDA		
Capacity	Cooling	Min ~ Rated ~ Max	kW	1.1	5.0	5.8
			Btu/h	3751	17,060	19778
	Heating	Min ~ Rated ~ Max	kW	-	-	-
			Btu/h	-	-	-
Power Input	Cooling	Min ~ Rated ~ Max	W	300	1290	1680
	Heating	Min ~ Rated ~ Max	W	-	-	-
Running Current	Cooling	Min ~ Rated ~ Max	A	-	5.9	-
	Heating	Min ~ Rated ~ Max	A	-	-	-
Starting Current	Cooling	Rated	A	-		
EER			W/W	3.88		
			(Btu/h)/W	13.23		
ISEER			-	5.20		
COP			W/W	-		
			(Btu/h)/W	-		
Power Supply			Ø, V, Hz	1, 230, 50		
Available Voltage Range			V	187 ~ 276		
Power Factor		Cooling / Heating	%	95.0 / -		
Moisture Removal			l/h	1.8		
Indoor	Air Flow Rate	Cooling, Max / H / M / L	㎥/min	17.3 / 12.7 / 10.2 / 8.4		
			CFM	610 / 448 / 360 / 297		
		Heating, Max / H / M / L	㎥/min	-		
			CFM	-		
	Fan Motor Speed	Cooling, Max / H / HM / M / ML / L / SL	rpm	1450 / 1150 / 1050 / 950 / 860 / 770 / 700		
		Heating, Max / H / HM / M / ML / L / SL	rpm	-		
	Sound Pressure Level	Cooling, Max / H / M / L / SL	dB(A)	- /45/39/35/31		
		Heating, Max / H / M / L	dB(A)	-		
	Dimensions (W × H × D)	Net	mm	998*345*210		
		Shipping	mm	1078*425*280		
	Weight	Net	kg	11.0		
		Shipping	kg	14.0		
	Operation Range	Cooling	℃ DB	16~32		
		Heating	℃ WB	-		
Outdoor	Air Flow Rate	Max	㎥/min	35		
	Sound Pressure Level	Cooling, Rated	dB(A)	56		
		Heating, Rated	dB(A)	-		
	Dimensions (W × H × D)	Net	mm	770x545x288		
		Shipping	mm	918x595x391		
	Weight	Net	kg	30.0		
		Shipping	kg	33.0		
	Max. Fuse Size		A	20		
	Operation Range	Cooling	℃ DB	18 ~ 48		
		Heating	℃ WB	-		
Compressor	Type		-	Twin Rotary		
	Model		-	DST134MCA		
	Motor Type		-	BLDC		
	Oil Type / Maker		-	PVE (FW68D) / IDEMITSU		
	Oil Charge		cc	330		
	O.L.P. Name		-	-		
	Manufacturer / Country of Origin		-	LGEIL LG INDIA		
Fan(Indoor)	Type		-	Cross Flow Fan		
	Motor Output		W	30		
Fan(Outdoor)	Type		-	Propeller Fan		
	Motor Type		-	BLDC		
	Motor Output		W	43		
	Motor Insulation		-	Class E		
Heat Exchanger	Evaporator	Material, Tube / Fin	-	Cu / Al		
		Fin Spacing	FPI	21		
		Corrosion Protection	-	BARE		
	Condenser	Material, Tube / Fin	-	Cu / Al		
		Fin Spacing	FPI	18		
		Corrosion Protection	-	GOLD II		
Circuit Breaker			A	20		
Power Supply Cable			No. × ㎟	3 × 1.5		
Power Supply to Unit			-	Indoor		
Power and Communication Cable			No. × ㎟	4 × 1.5		
Piping	Size	Liquid	mm / (in)	Ø 6.35 / (1/4)		
		Gas	mm / (in)	Ø 12.7 / (1/2)		
	Connections Method	Indoor / Outdoor	-	Flared / Flared		
Drain Hose Size		O.D, I.D	mm	21.5, 16.0		
Between Indoor & Outdoor	Piping Length	Min / Standard / Max	m	3.0 / 5.0 / 20		
		No Charge	m	5.0		
	Max. Elevation Difference		m	10.0		
Refrigerant		Type	-	R32		
		Pre Charge	g	900		
		Additional Charge	g/m	10		
		Control	-	Electronic Expansion Valve		
Defrost Method			-	-		
Tool Code (Chassis)		Indoor / Outdoor	-	SKU18A		

Copyright ©2024 LG Electronics. Inc. All rights reserved.
Only training and service purposes.

2. Function

Category	Function		US-Q19SWZE.ANLG S3-Q18KL2FN.ALWGIDA
Air Flow	Air Supply Outlet		1
	Airflow Direction Control (Left & Right)		5 Steps
	Airflow Direction Control (Up & Down)		6 Steps
	Auto Swing (Left & Right)		O
	Auto Swing (Up & Down)		O
	Fan Speed Steps (Fan / Cool / Heat)		6 / 6 / X
	Natural Wind (Auto Wind)		O
	Jet Cool / Jet Heat (Power Wind)		X / X
	Comfort Air		O
Air Purifying	Prefilter (Washable / Anti-Virus)		O
	Deodorizing Filter		X
	Allergy Filter		O
	3M Multi Protection Filter		X
	Plasma Air Purifier (Ionizer)		X
Installation	Drain Pump		X
Reliability	Hot Start		X
	Self Diagnosis		O
	De-ice Control (Defrost)		X
	Dry (Dehumidification) Operation		O
Convenience	Auto Changeover		X
	Auto Operation (Artificial Intelligence)		O
	Auto Cleaning (Coil Dry)		O
	Auto Restart Operation		O
	Child Lock [1]		X
	Forced Operation		O
	Group Control [1]		X
	Sleep Mode		7hr
	Timer 24hr (On/Off) / 7hr (Off)		O/X
	Timer (Weekly) [1]		X
	Two Thermistor Control [1]		X
	Low Ambient Operation		X
	Overheating Protection		X
	Low Heating		X
	Voice Control		O
	Smart Scan (PIR)		X
	LG AC Tag On (NFC)		X
	Outdoor Silent Mode		X
	Mosquito Away		X
	Smart Diagnosis		O
	Indoor Unit Display Type		Number Display
	Indoor Unit Display Light		On/Off
	Energy Display		X
Energy Saving	Energy Saving		X
	AEC /KW Manager		O
	Gen Mode		X
Individual Control	Wired Remote Controller (Premium) [2]		X
	Wired Remote Controller (Standard) [2]		X
	Wired Remote Controller (Simple with Mode Selection) [2]		X
	Wired Remote Controller (Simple without Mode Select ion) [2]		X
	Handheld Wireless Controller	(See Remote Controller Section	AKB76044902
		Setting Temperature Range (Cooling)	16~30 (60~86)
		Setting Temperature Range (Heating)	X
CAC Network Function	General Central Controller (Non LGAP)		X
	Network Solution (LGAP)		X
	Dry Contact [2]		X
	PDI (Power Distribution Indicator) [2]		X
	Outdoor Unit PI 485 [2]		X
Special Function Kit	Wi-Fi [2]		O
	Water Level Sensor Connection [2]		X
	Wind Baffle Kit [2]		X
	Sump Heater		X
	Sheath Heater [2]		X
	Crank Case Heater		X
	Smart Inverter Monitoring System (SIMs) [2]		X
Others	Mode Lock		X
	Temperature Control		Thermistor
	DRED (Demand Response Enabling Device)		X

Note
O : Applied, X : Not Applied
• Filters are optional in some specific areas.
• [1] : This function can be operated only when the wired remote controller is connected. The applicability of each function depends on the above table.
• [2] : Optional accessories must be purchased separately. If shown as "Embedded", this function is included in product.
• The function Wi-Fi is only compatible with 2.4 GHz band. (802.11 b/g/n)
• Some specifications may be changed without notifications due to our policy of innovation.

Copyright ©2024 LG Electronics. Inc. All rights reserved.
Only training and service purposes.

3. Refrigerant Cycle Diagram

Model: S3-Q18KL2FN.ALWGIDA

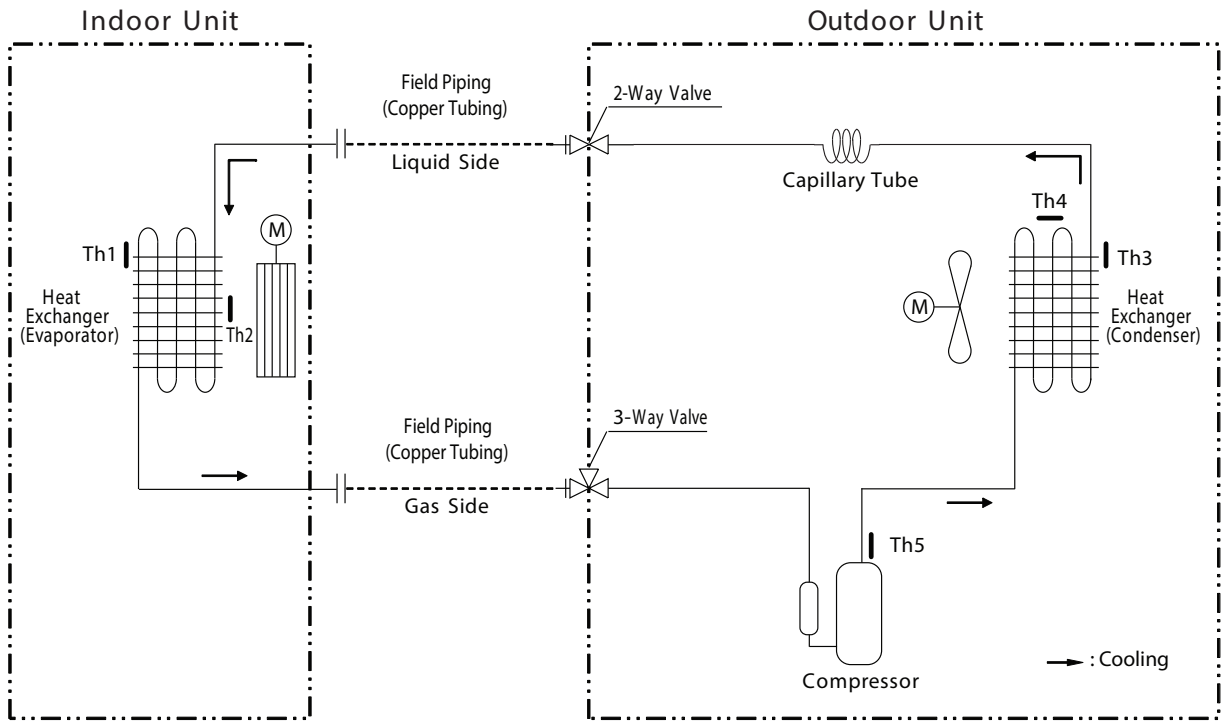

LOC.	Description	PCB Connector
Th 1	Thermistor for Indoor air temperature	CN_TH1 (Indoor)
Th2	Thermistor for evaporator In temperature	CN_TH3 (Indoor)
Th3	Thermistor for outdoor air temperature	CN_TH1 (Outdoor)
Th4	Thermistor for condensing temperature	
Th 5	Thermistor for discharge pipe temperature	CN_TH2 (Outdoor)

■ Refrigerant Pipe Connection Port Diameters

Model	Gas		Liquid	
	mm	inch	mm	inch
S3-Q18KL2FN.ALWGIDA	Ø 12.7	Ø 1/2	Ø 6.35	Ø 1/4

Appendix	Heat Exchanger	Propeller Fan	Cross Flow Fan	Compressor	Accumulator	4 Way Valve
	EEV (Electronic Expansion Valve)	Capillary Tube	2-Way Valve 3-Way Valve	Temperature Sensor	Pressure Sensor	Pressure Switch
	Check Valve	Flare Joint	Muffler	Strainer		

Copyright ©2024 LG Electronics. Inc. All rights reserved.
Only training and service purposes.

4. Wiring Diagrams

Indoor Unit : S3NQ18KL2FN.ALWGIDA

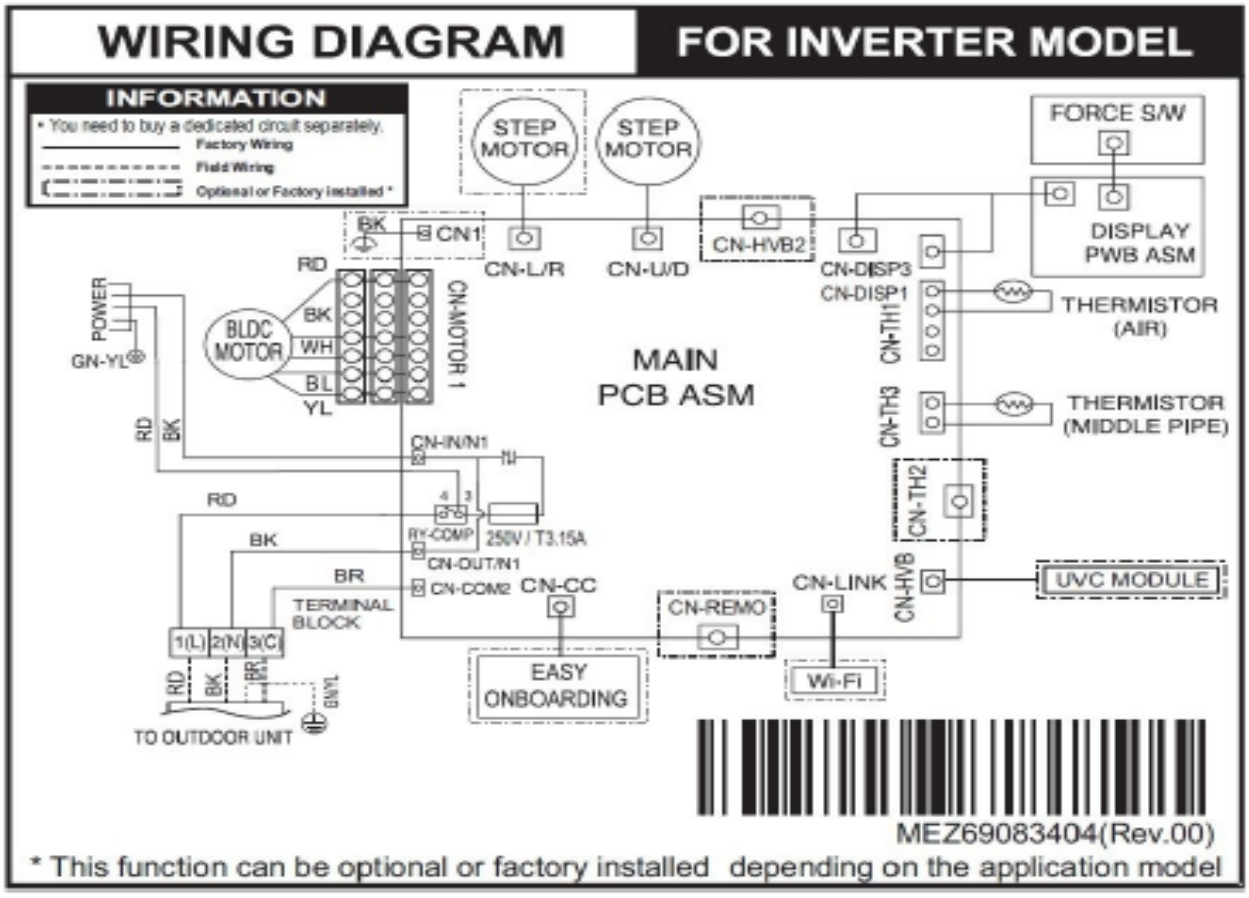

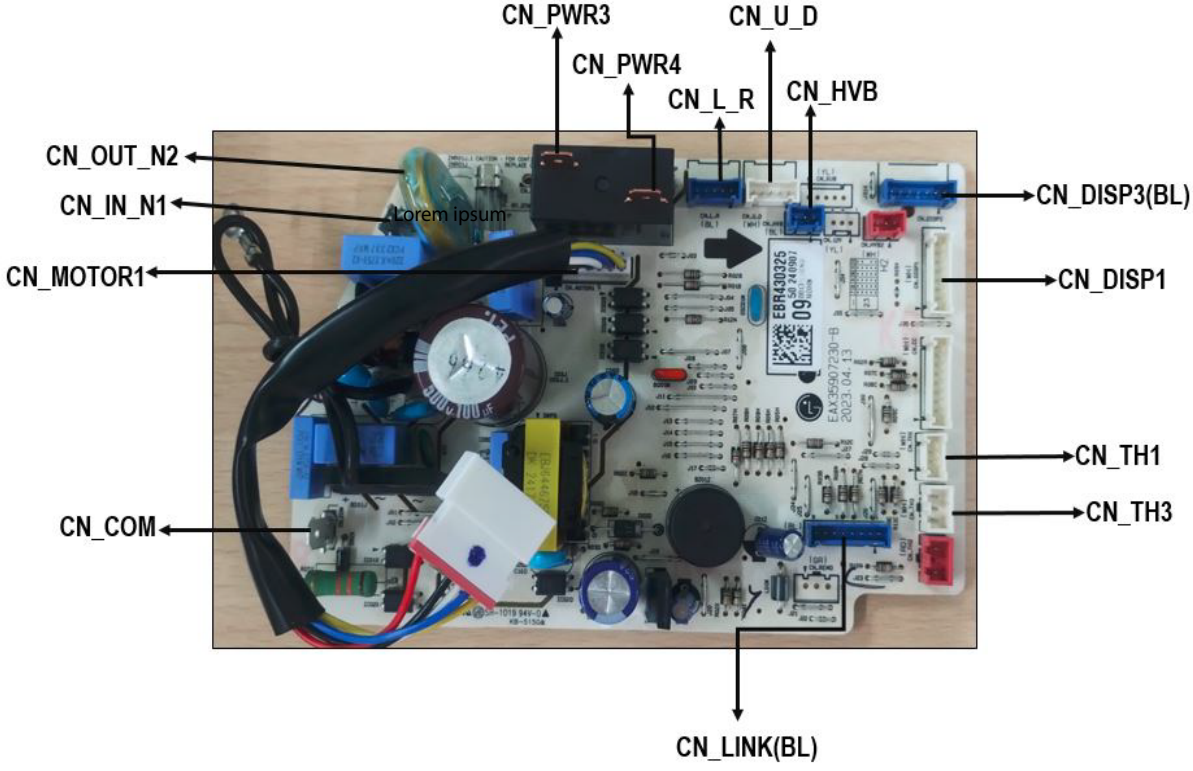

Copyright ©2024 LG Electronics. Inc. All rights reserved.
Only training and service purposes.

4.2 Wiring Diagrams

Outdoor Unit: S3UQ18KL2FN.ALWGIDA

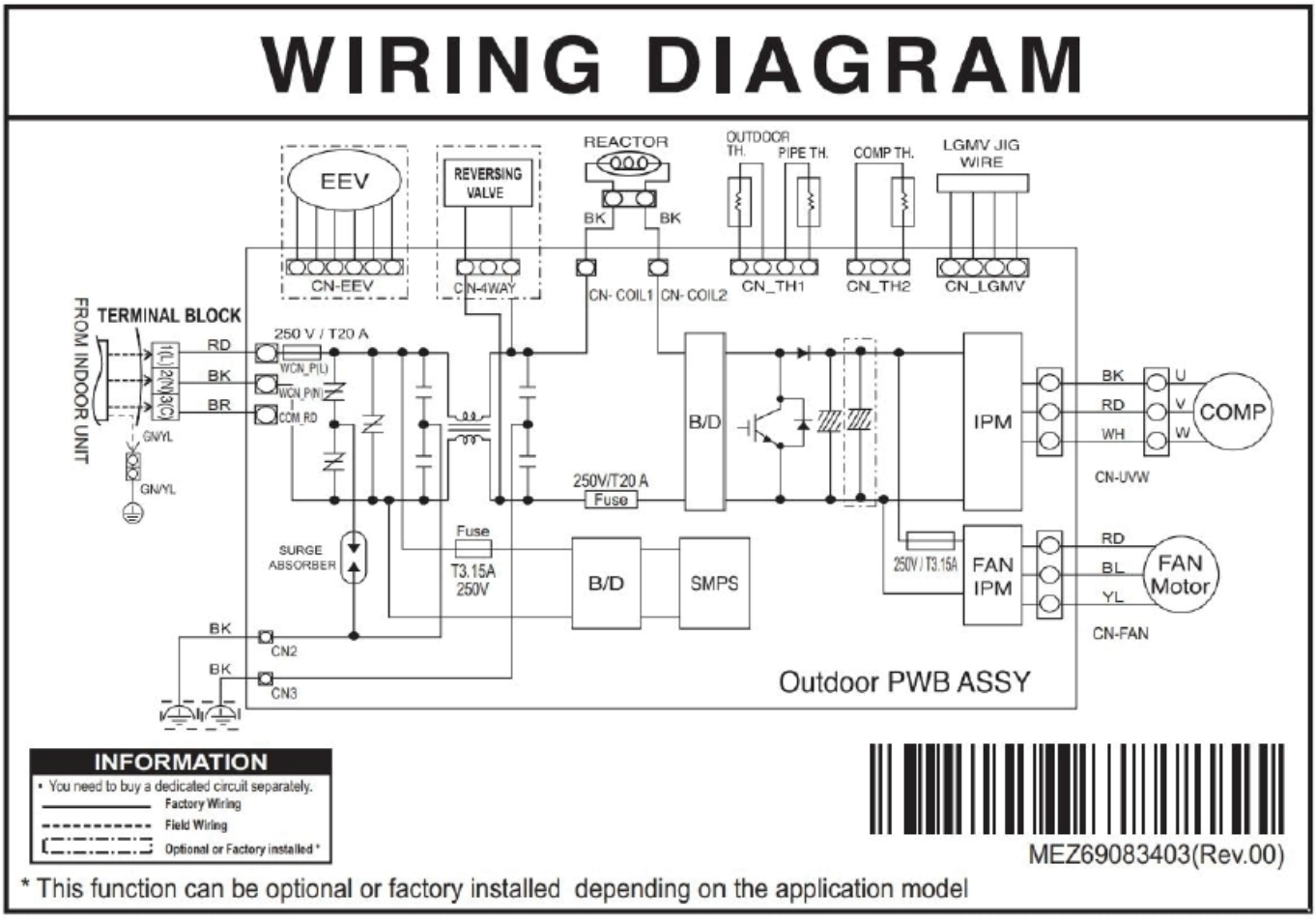

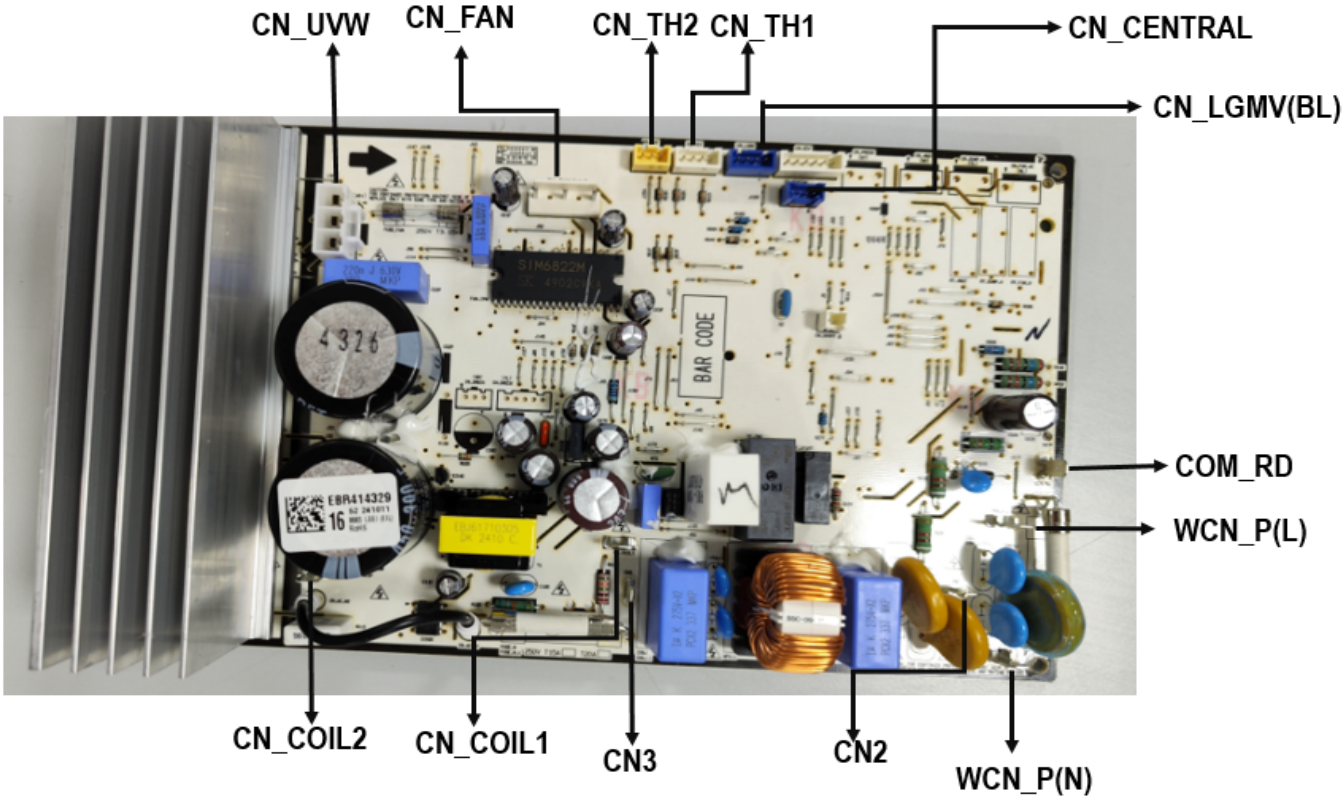

Copyright ©2024 LG Electronics. Inc. All rights reserved.
Only training and service purposes.

Exploded View

Indoor Unit

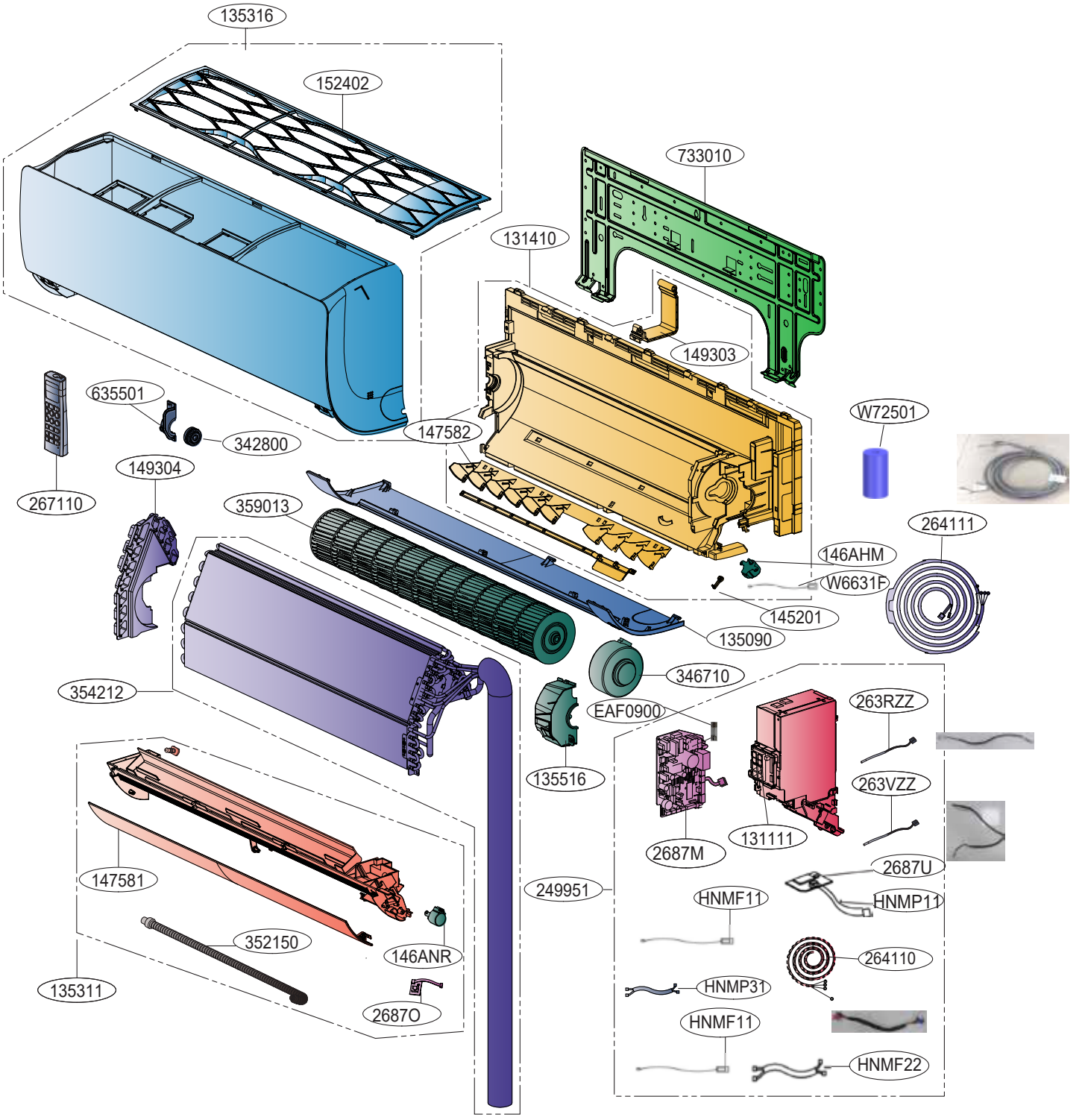

LOC.	Description	PCB Connector
263RZZ	Thermistor for indoor air temperature	CN-TH1 (INDOOR)
263VZZ	Thermistor for evaporating temperature	CN-TH3 (INDOOR)

Copyright ©2025 LG Electronics. Inc. All rights reserved.
Only training and service purposes.

Exploded View

Outdoor Unit :

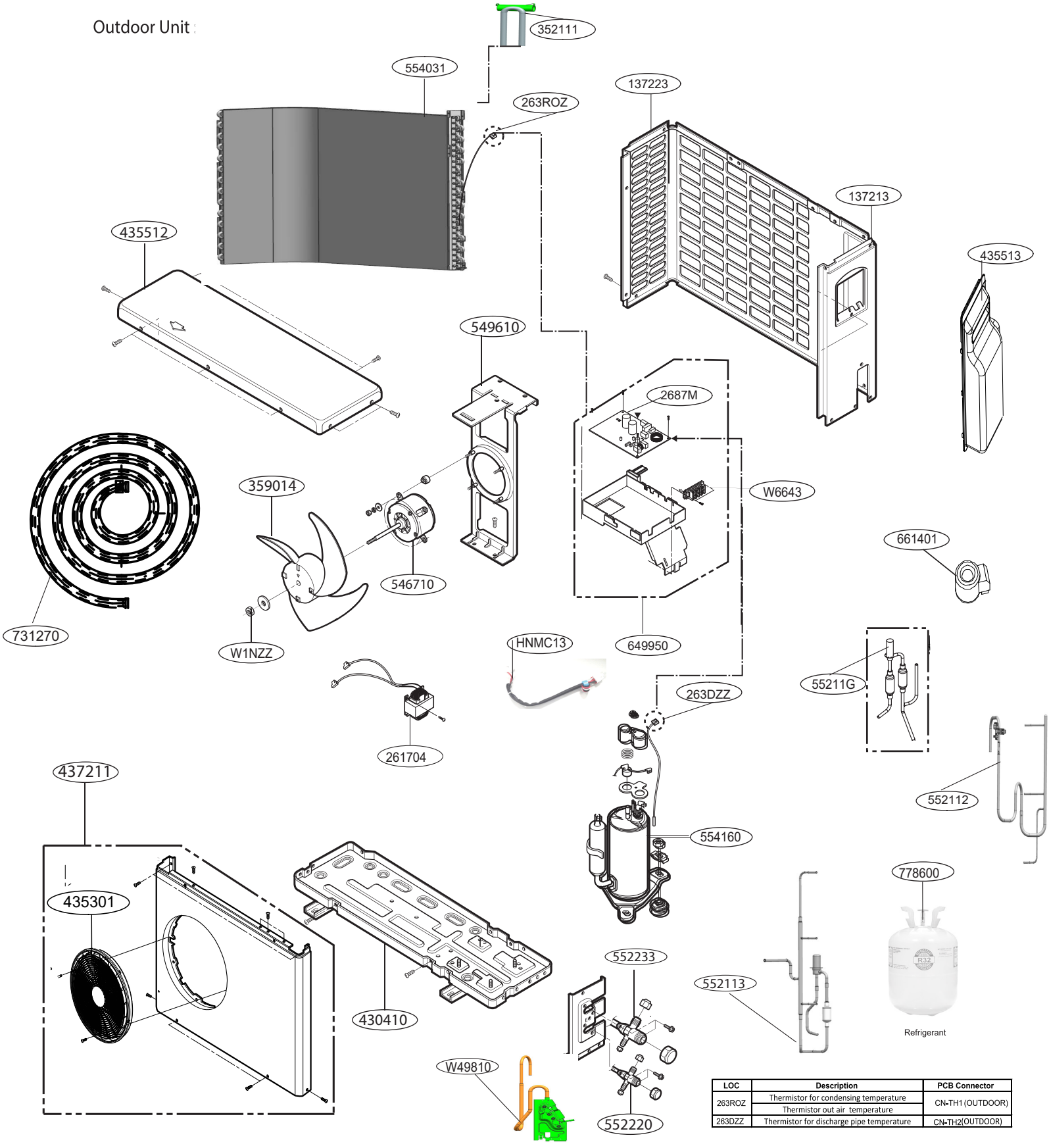

LOC	Description	PCB Connector
263ROZ	Thermistor for condensing temperature	CN-TH1 (OUTDOOR)
	Thermistor out air temperature	
263DZZ	Thermistor for discharge pipe temperature	CN-TH2(OUTDOOR)

Copyright ©2024 LG Electronics. Inc. All rights reserved.
Only training and service purposes.

SVC Guide

▪Guide 'How to disassemble the C/Box from the Chassis'

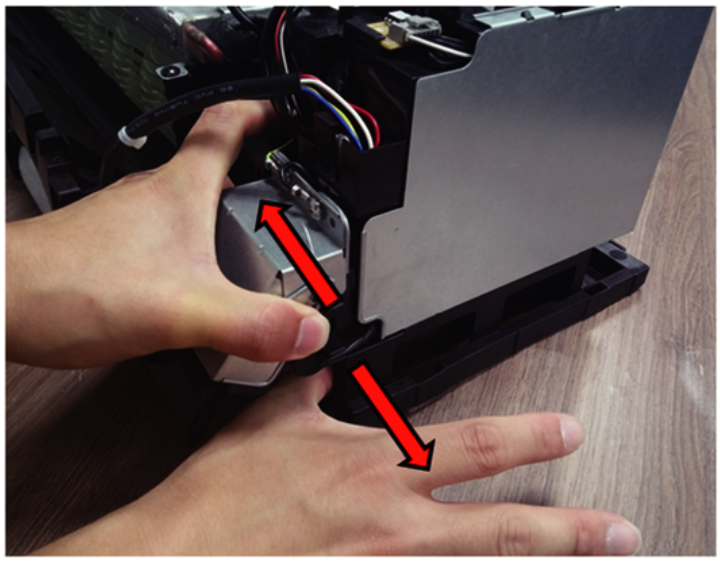

-.Right Hand : Push the chassis(Refer to the picture)
-.Left Hand : Push the C/Box(Refer to the picture)

▪Guide 'How to disassemble the Cover(PD) from the C/Box'

1)

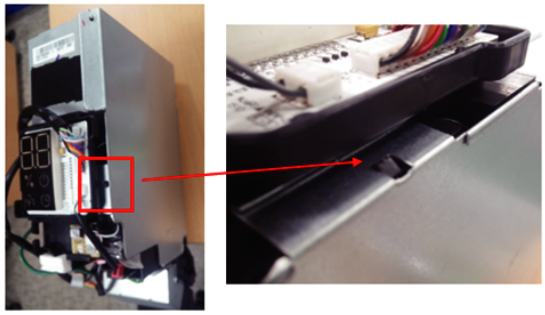

2)

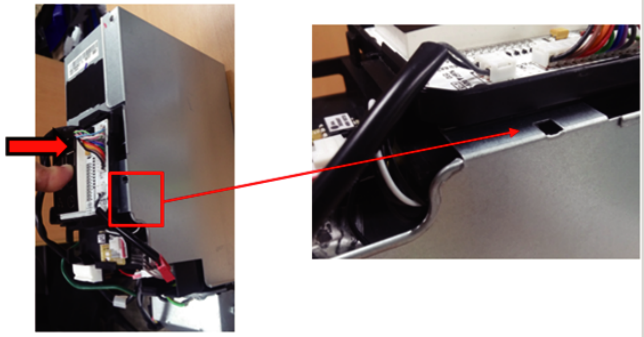

Push the Display

3)

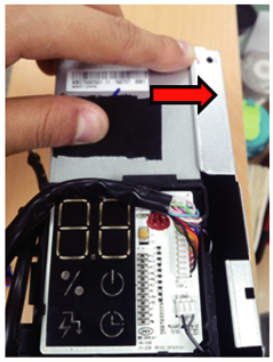

Push the Case to the right

Copyright ©2024 LG Electronics. Inc. All rights reserved.
Only training and service purposes.

WARNING

- Do not use means to accelerate the defrosting process or to clean, other than those recommended by the manufacturer.
- The appliance shall be stored in a room without continuously operating ignition sources. (for example: open flames, an operating gas appliance or an operating electric heater)
- Do not pierce or burn.
- Be aware that refrigerants may not contain an oduor.
- The appliance shall be stored in a well-ventilated area where the room size corresponds to the room area as specified for operation.
- An unventilated area where the appliance using flammable refrigerants is installed shall be so constructed that should any refrigerant leak, it will not stagnated so as to create a fire or explosion hazard
- Information of Maximum charge amount : 1,400g (R-32), Information of minimum floor area : 1.87m^2
- If you want to know information of installation, Read Installation Manual.
- Keep any required ventilation openings clear of obstruction.
- The installation of pipe-work shall be kept to a minimum.
- Pipe-work shall be protected from physical damage and shall not be installed in an unventilated space, if that space is smaller than 1.87m^2.
- Compliance with national gas regulations shall be observed.
- Mechanical connections shall be accessible for maintenance purposes.
- The appliance shall be stored so as to prevent mechanical damage from occurring.
- Any person who is involved with working on or breaking into a refrigerant circuit should hold a current valid certificate from an industry-accredited assessment authority, which authorises their competence to handle refrigerants safely in accordance with an industry recognised assessment specification.
- Servicing shall only be performed as recommended by the equipment manufacturer. Maintenance and repair requiring the assistance of other skilled personnel shall be carried out under the supervision of the person competent in the use of flammable refrigerants.

PRECHECK PRIOR TO SERVICE

[Checks to the area]

Prior to beginning work on systems containing flammable refrigerants, safety checks are necessary to ensure that the risk of ignition is minimised. For repair to the refrigerating system, [General work area] to [Ventilated area] shall be completed prior to conducting work on the system.

[Work procedure]

Work shall be undertaken under a controlled procedure so as to minimize the risk of a flammable gas or vapour being present while the work is being performed.

[General work area]

All maintenance staff and others working in the local area shall be instructed on the nature of work being carried out. Work in confined spaces shall be avoided. The area around the workspace shall be sectioned off. Ensure that the conditions within the area have been made safe by control of flammable material.

[Checking for presence of refrigerant]

The area shall be checked with an appropriate refrigerant detector prior to and during work, to ensure the technician is aware of potentially toxic or flammable atmospheres. Ensure that the leak detection equipment being used is suitable for use with all applicable refrigerants, i.e. non-sparking, adequately sealed or intrinsically safe.

[Presence of fire extinguisher]

If any hot work is to be conducted on the refrigeration equipment or any associated parts, appropriate fire extinguishing equipment shall be available to hand. Have a dry powder or CO2 fire extinguisher adjacent to the charging area.

[No ignition sources]

No person carrying out work in relation to a refrigeration system which involves exposing any pipe work shall use any sources of ignition in such a manner that it may lead to the risk of fire or explosion. All possible ignition sources, including cigarette smoking, should be kept sufficiently far away from the site of installation,repairing, removing and disposal, during which refrigerant can possibly be released to the surrounding space. Prior to work taking place, the area around the equipment is to be surveyed to make sure that there are no flammable hazards or ignition risks."No Smoking" signs shall be displayed.

Copyright ©2024 LG Electronics. Inc. All right reserved.
Only for training and service purposes

LGE Internal Use Only

[Checks to the refrigeration equipment]

Where electrical components are being changed, they shall be fit for the purpose and to the correct specification. At all times the manufacturer's maintenance and service guidelines shall be followed. If in doubt, consult the manufacturer's technical department for assistance.

The following checks shall be applied to installations using flammable refrigerants:

- The actual refrigerant charge is in accordance with the room size within which the refrigerant containing parts are installed;
- The ventilation machinery and outlets are operating adequately and are not obstructed;
- If an indirect refrigerating circuit is being used, the secondary circuit shall be checked for the presence of refrigerant;
- Marking to the equipment continues to be visible and legible, Markings and signs that are illegible shall be corrected;
- Refrigeration pipe or components are installed in a position where they are unlikely to be exposed to any substance which may corrode refrigerant containing components, unless the components are constructed of materials which are inherently resistant to being corroded or are suitably protected against being so corroded.
- When mechanical connectors are reused indoors, sealing parts shall be renewed. When flared joints are reused indoors, the flare part shall be re-fabricated.

[Checks to electrical devices]

Repair and maintenance to electrical components shall include initial safety checks and component inspection procedures. If a fault exists that could compromise safety, then no electrical supply shall be connected to the circuit until it is satisfactorily dealt with. If the fault cannot be corrected immediately but it is necessary to continue operation, an adequate temporary solution shall be used. This shall be reported to the owner of the equipment so all parties are advised.

Initial safety checks shall include:

- That capacitors are discharged: this shall be done in a safe manner to avoid possibility of sparking;
- That no live electrical components and wiring are exposed while charging, recovering or purging the system;
- That there is continuity of earth bonding.

[Handling]

- The appliance should only be transported by two or more people holding the appliance securely.
- At delivery, the unit must be checked for damage. Any damage must be reported immediately to the carrier's claims agent.
- The tubing shall be protected to the extent that it will not be handled or used for carrying during moving of the product.

REPAIRS TO SEALED COMPONENTS

During repairs to sealed components, all electrical supplies shall be disconnected from the equipment being worked upon prior to any removal of sealed covers, etc. If it is absolutely necessary to have an electrical supply to equipment during servicing, then a permanently operating form of leak detection shall be located at the most critical point to warn of a potentially hazardous situation.

Particular attention shall be paid to the following to ensure that by working on electrical components, the casing is not altered in such a way that the level of protection is affected. This shall include damage to cables, excessive number of connections, terminals not made to original specification, damage to seals, incorrect fitting of glands, etc.

- Ensure that the apparatus is mounted securely.
- Ensure that seals or sealing materials have not degraded to the point that they no longer serve the purpose of preventing the ingress of flammable atmospheres. Replacement parts shall be in accordance with the manufacturer's specifications.

NOTE: The use of silicon sealant can inhibit the effectiveness of some types of leak detection equipment.
Intrinsically safe components do not have to be isolated prior to working on them.

REPAIRS TO INTRINSICALLY SAFE COMPONENTS

Do not apply any permanent inductive or capacitance loads to the circuit without ensuring that this will not exceed the permissible voltage and current permitted for the equipment in use.

Intrinsically safe components are the only types that can be worked on while live in the presence of a flammable atmosphere. The test apparatus shall be at the correct rating.

Replace components only with parts specified by the manufacturer. Other parts may result in the ignition of refrigerant in the atmosphere from a leak.

CABLING

Check that cabling will not be subject to wear, corrosion, excessive pressure, vibration, sharp edges or any other adverse environmental effects. The check shall also take into account the effects of aging or continual vibration from sources such as compressors or fans.

Copyright ©2024 LG Electronics. Inc. All right reserved.
Only for training and service purposes

LGE Internal Use Only

DETECTION OF FLAMMABLE REFRIGERANTS

Under no circumstances shall potential sources of ignition be used in the searching for or detection of refrigerant leaks. A halide torch (or any other detector using a naked flame) shall not be used.

LEAK DETECTION METHODS

The following leak detection methods are deemed acceptable for all refrigerant systems.

Electronic leak detectors may be used to detect refrigerant leaks but, in the case of flammable refrigerants, the sensitivity may not be adequate, or may need re-calibration.(Detection equipment shall be calibrated in a refrigerant-free area.) Ensure that the detector is not a potential source of ignition and is suitable for the refrigerant used. Leak detection equipment shall be set at a percentage of the LFL of the refrigerant and shall be calibrated to the refrigerant employed, and the appropriate percentage of gas (25 % maximum) is confirmed.

Leak detection fluids are suitable for use with most refrigerants but the use of detergents containing chlorine shall be avoided as the chlorine may react with the refrigerant and corrode the copper pipe-work.

If a leak is suspected, all naked flames shall be removed/extinguished.

If a leakage of refrigerant is found which requires brazing, all of the refrigerant shall be recovered from the system, or isolated (by means of shut off valves) in a part of the system remote from the leak. For appliances containing flammable refrigerants, oxygen free nitrogen (OFN) shall then be purged through the system both before and during the brazing process.

REMOVAL AND EVACUATION

When breaking into the refrigerant circuit to make repairs – or for any other purpose – conventional procedures shall be used. However, for flammable refrigerants it is important that best practice is followed since flammability is a consideration. The following procedure shall be adhered to:

- remove refrigerant;
- purge the circuit with inert gas;
- evacuate;
- purge again with inert gas;
- open the circuit by cutting or brazing.

When breaking into the refrigerant circuit to make repairs – or for any other purpose – conventional procedures shall be used. However, for flammable refrigerants it is important that best practice is followed since flammability is a consideration. The following procedure shall be adhered to:
For appliances containing flammable refrigerants, flushing shall be achieved by breaking the vacuum in the system with OFF and continuing to fill until the working pressure is achieved, then venting to atmosphere, and finally pulling down to a vacuum. This process shall be repeated until no refrigerant is within the system. When the final OFN charge is used, the system shall be vented down to atmospheric pressure to enable work to take place. This operation is absolutely vital if brazing operations on the pipe-work are to take place.

Ensure that the outlet for the vacuum pump is not close to any ignition sources and that ventilation is available.

CHARGING PROCEDURE

In addition to conventional charging procedures, the following requirements shall be followed.

- Ensure that contamination of different refrigerants does not occur when using charging equipment. Hoses or lines shall be as short as possible to minimise the amount of refrigerant contained in them.
- Cylinders shall be kept upright.
- Ensure that the refrigeration system is earthed prior to charging the system with refrigerant.
- Label the system when charging is complete (if not already).
- Extreme care shall be taken not to overfill the refrigeration system.

Prior to recharging the system, it shall be pressure-tested with the appropriate purging gas. The system shall be leak-tested on completion of charging but prior to commissioning. A follow up leak test shall be carried out prior to leaving the site.

Copyright ©202□ LG Electronics. Inc. All right reserved.
Only for training and service purposes

LGE Internal Use Only

DECOMMISSIONING

Before carrying out this procedure, it is essential that the technician is completely familiar with the equipment and all its detail. It is recommended good practice that all refrigerants are recovered safely. Prior to the task being carried out, an oil and refrigerant sample shall be taken in case analysis is required prior to re-use of reclaimed refrigerant. It is essential that electrical power is available before the task is commenced. The treatment of the refrigerant, oil and other parts must comply with the applicable legislation.

a) Become familiar with the equipment and its operation.
b) Isolate appliance electrically.
c) Before attempting the procedure ensure that:
   - mechanical handling equipment is available, if required, for handling refrigerant cylinders;
   - all personal protective equipment is available and being used correctly;
   - the recovery process is supervised at all times by a competent person;
   - recovery equipment and cylinders conform to the appropriate standards.
d) Pump down refrigerant system, if possible.
e) If a vacuum is not possible, make a manifold so that refrigerant can be removed from various parts of the system.
f) Make sure that cylinder is situated on the scales before recovery takes place.
g) Start the recovery machine and operate in accordance with manufacturer's instructions.
h) Do not overfill cylinders. (No more than 80 % volume liquid charge).
i) Do not exceed the maximum pressure of the cylinder, even temporarily.
j) When the cylinders have been filled correctly and the process completed, make sure that the cylinders and the equipment are removed from site promptly and all isolation valves on the equipment are closed off.
k) Recovered refrigerant shall not be charged into another refrigeration system unless it has been cleaned and checked.

LABELLING

Equipment shall be labelled stating that it has been de-commissioned and emptied of refrigerant. The label shall be dated and signed. For appliances containing flammable refrigerants, ensure that there are labels on the equipment stating the equipment contains flammable refrigerant.

RECOVERY

When removing refrigerant from a system, either for servicing or decommissioning, it is recommended good practice that all refrigerants are removed safely.

When transferring refrigerant into cylinders, ensure that only appropriate refrigerant recovery cylinders are employed. Ensure that the correct number of cylinders for holding the total system charge are available. All cylinders to be used are designated for the recovered refrigerant and labelled for that refrigerant (i.e. special cylinders for the recovery of refrigerant). Cylinders shall be complete with pressure-relief valve and associated shut-off valves in good working order. Empty recovery cylinders are evacuated and, if possible, cooled before recovery occurs.

The recovery equipment shall be in good working order with a set of instructions concerning the equipment that is at hand and shall be suitable for the recovery of all appropriate refrigerants including, when applicable, flammable refrigerants. In addition, a set of calibrated weighing scales shall be available and in good working order. Hoses shall be complete with leak-free disconnect couplings and in good condition. Before using the recovery machine, check that it is in satisfactory working order, has been properly maintained and that any associated electrical components are sealed to prevent ignition in the event of a refrigerant release. Consult manufacturer if in doubt.

The recovered refrigerant shall be returned to the refrigerant supplier in the correct recovery cylinder, and the relevant waste transfer note arranged. Do not mix refrigerants in recovery units and especially not in cylinders.

If compressors or compressor oils are to be removed, ensure that they have been evacuated to an acceptable level to make certain that flammable refrigerant does not remain within the lubricant. The evacuation process shall be carried out prior to returning the compressor to the suppliers. Only electric heating to the compressor body shall be employed to accelerate this process. When oil is drained from a system, it shall be carried out safely.

Copyright ©2024 LG Electronics. Inc. All right reserved.
Only for training and service purposes

LGE Internal Use Only

MFL05742628

Dec’24